Dimensions of KA-600 Raster Ruler

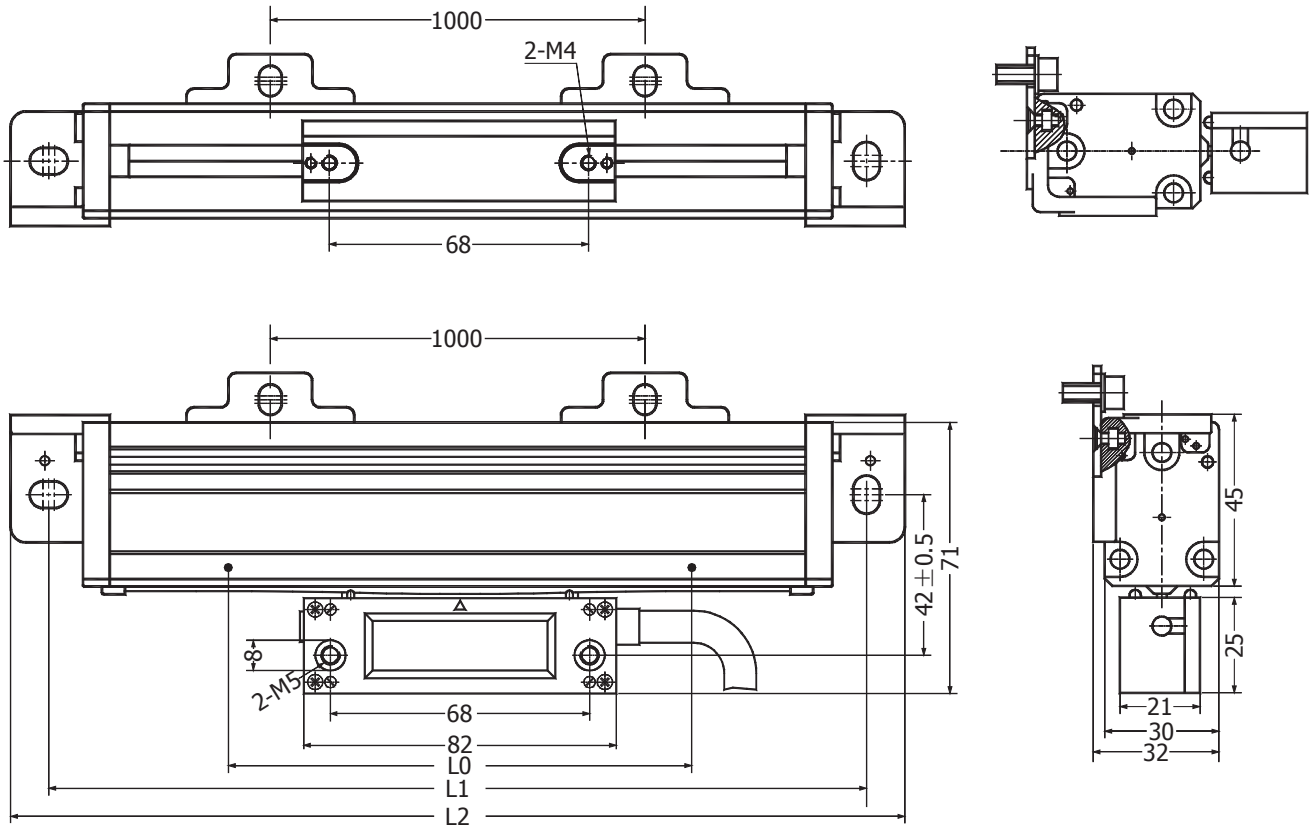

Fig. 13

Model	L0	L1	L2	Model	L0	L1	L2
KA600-1000	1000	1150	1170	KA600-2100	2100	2250	2270
KA600-1100	1100	1250	1270	KA600-2200	2200	2350	2370
KA600-1200	1200	1350	1370	KA600-2300	2300	2450	2470
KA600-1300	1300	1450	1470	KA600-2400	2400	2550	2570
KA600-1400	1400	1550	1570	KA600-2500	2500	2650	2670
KA600-1500	1500	1650	1670	KA600-2600	2600	2750	2770
KA600-1600	1600	1750	1770	KA600-2700	2700	2850	2870
KA600-1700	1700	1850	1870	KA600-2800	2800	2950	2970
KA600-1800	1800	1950	1970	KA600-2900	2900	3050	3070
KA600-1900	1900	2050	2070	KA600-3000	3000	3150	3170
KA600-2000	2000	2150	2170				

L0: Effective metering length

L1: Distance between installation holes

L2: Full ruler length